Annu. Rev. Biophys. Biomol. Struct. 2000. 29:49–79

Signaling and Subcellular Targeting by Membrane-Binding Domains[1]

James H. Hurley and Saurav Misra
Laboratory of Molecular Biology, National Institute of Diabetes and Digestive and Kidney Diseases, National Institutes of Health, Bethesda, Maryland 20892-0580; e-mail: jh8e@nih.gov

Key Words C1 domain, C2 domain, FYVE domain, PH domain, subcellular localization

■ **Abstract** Protein kinase C homology-1 and -2, FYVE, and pleckstrin homology domains are ubiquitous in eukaryotic signal transduction and membrane-trafficking proteins. These domains regulate subcellular localization and protein function by binding to lipid ligands embedded in cell membranes. Structural and biochemical analysis of these domains has shown that their molecular mechanisms of membrane binding depend on a combination of specific and nonspecific interactions with membrane lipids. In vivo studies of green fluorescent protein fusions have highlighted the key roles of these domains in regulating protein localization to plasma and internal membranes in cells.

CONTENTS

PERSPECTIVES AND OVERVIEW 50
C1 DOMAINS 51
Structure of the C1 Domain 52
Diacylglycerol-Promoted Membrane Association 52
Predicting C1 Domain Function from Sequence 53
Multi-C1-Domain Proteins: the Contribution of Context 53
C2 DOMAINS 54
Structure of the C2 Domain 54
Ca^{2+}-Binding Sites 56
Membrane-Binding Sites 56
Phospholipid Specificity and Subcellular Localization 56
Mechanism of Ca^{2+}-Dependent Membrane Binding 57
Electrostatic Interactions with Membranes 58

[1]The US government has the right to retain a nonexclusive, royalty-free license in and to any copyright covering this paper.

Ca^{2+}-Independent C2 Domains 59
Interdomain Interactions 59
FYVE DOMAINS 60
FYVE Domain Structure, Ligand Binding, and Specificity 60
FYVE Domain Binding to Membranes 62
PLECKSTRIN HOMOLOGY DOMAINS 63
Structure of the PH Domain 63
Inositol Phosphate-Binding Subsites 63
Phosphoinositide Specificity 65
Membrane-Binding Mechanisms 67
Localization to Cell Membranes 67
Roles of PH Domains Within Larger Proteins 68
OTHER MEMBRANE-BINDING DOMAINS 68
CONCLUDING REMARKS 69
Stereospecific and Nonspecific Interactions with Membranes 69
Biological Functions for Low-Affinity and Nonspecific Interactions 69
Targeting vs Allosteric Regulation 70
Can Domain Studies Help Read Genome Sequences? 70

PERSPECTIVES AND OVERVIEW

Subcellular targeting of proteins is a fundamental control mechanism in eukaryotic cells. Localization to different cell compartments is often brought about by protein-protein interaction domains (70, 100). Another major class of subcellular targeting domains binds specifically to lipid ligands in cell membranes. The best known members of this group are the protein kinase C (PKC) homology-1 (C1) (54, 111) and -2 (C2) domains (89, 110), the pleckstrin homology (PH) domain (8, 34, 73, 109), and the FYVE domain (34, 42, 141). Although some C1, C2, and PH domains interact with proteins in addition to—or instead of—lipids, their best known roles are in lipid binding. This review emphasizes the membrane-binding mechanisms of these domains and their role in cell signaling.

These are exciting times for research on signal transduction domains. Studies of green fluorescent protein fusions with signaling proteins are yielding quantitative kinetic information in living cells. The three-dimensional structures of the C1, C2, FYVE, and PH domains have all been solved at high resolution by X-ray crystallography, and they have also been studied by nuclear magnetic resonance (NMR) and electron paramagnetic resonance (EPR). Site-directed mutagenesis, fluorescence, and surface pressure studies have made critical contributions to understanding how these proteins interact with membranes. Databases such as SMART (115; http://www.coot.embl-heidelberg.de/SMART) and Pfam (6; http://www.sanger.ac.uk/Software/Pfam) provide the most comprehensive census yet of signal-transducing domains. With the rapid growth of interest in membrane targeting as a mechanism for signal transduction, these developments are due for review.

C1 DOMAINS

The C1 domain is a compact zinc-containing motif of ~50 amino acid residues, formerly known as a "cysteine-rich" domain (Figure 1*a*). The C1 domain was discovered as a conserved region responsible for the allosteric activation of PKC isozymes (PKCs) by diacylglycerol and phorbol esters. C1 domains are now known to occur not only in PKCs but in >200 different proteins in the nonredundant

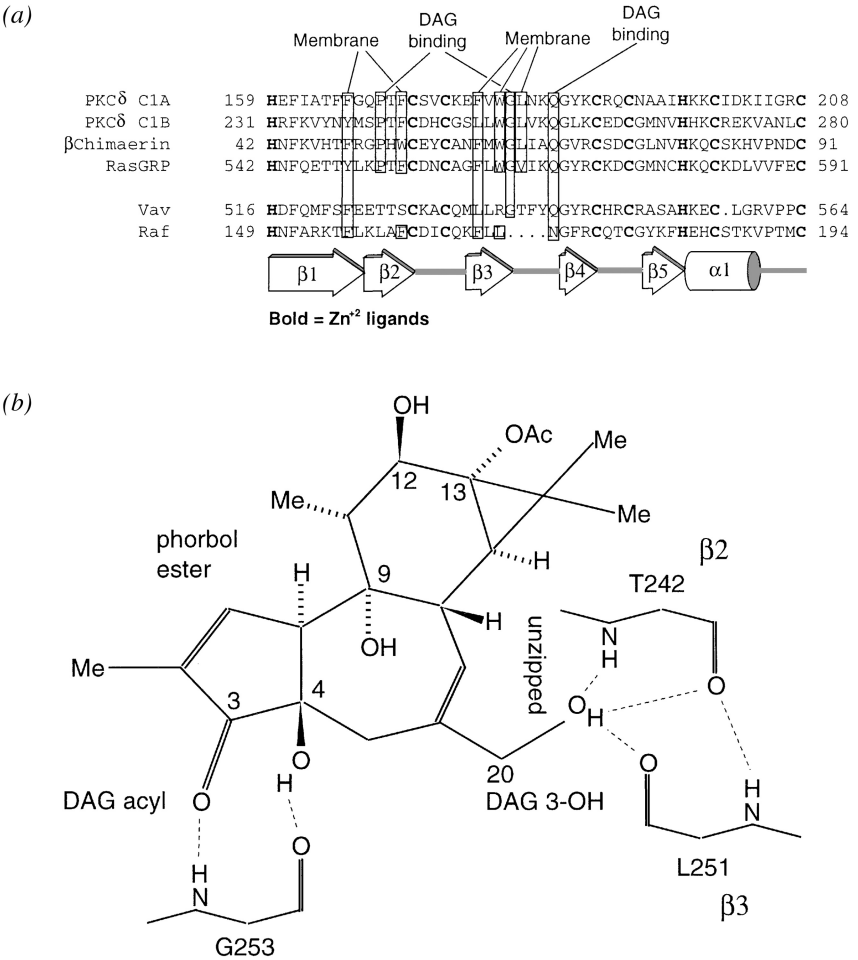

Figure 1 *a*. Alignment of C1 domains. Zn^{2+}-liganding residues are shown in bold. Membrane-interacting and diacylglycerol-binding-site residues are boxed. Vav and Raf represent atypical C1 domains that do not bind diacylglycerol and lack the crucial boxed residues. *b*. Schematic of the typical C1 phorbol ester-binding site (modified from Reference 146).

sequence databases [these numbers, obtained from the SMART database (115), are higher than quoted elsewhere owing both to new discoveries and to the inclusion of orthologs]. Some of these proteins, including PKCs, the chimaerins, Unc-13 (54, 111), and RasGRP (24, 111), are effectors of diacylglycerol. However, many of the known C1 domains do not bind diacylglycerol. This group of C1 domains is referred to as "atypical," and they are implicated in interactions with small G-proteins and membrane lipids other than diacylglycerol.

Structure of the C1 Domain

C1 domains contain two small β sheets and a short C-terminal α-helix that are built around two 3-Cys–1-His Zn^{2+}-binding clusters (52, 146; Figure 2*a*—see color insert). The Zn^{2+} ions are an integral part of the structure. The diacylglycerol- and phorbol ester-binding site is formed at one tip of the domain, where part of the second β sheet unzips. The linked ring structures of phorbol are inserted lengthwise into the narrow groove at the tip of the C1 domain. The 3- and 20-oxygens of phorbol interact with main-chain groups exposed by unzipping of two β strands (Figure 1*b*). One of the acyl group oxygens and the 3-hydroxyl of diacylglycerol are believed to occupy the same sites, whereas it is less clear how the second acyl group oxygen interacts.

Diacylglycerol-Promoted Membrane Association

One entire end of the C1 domain surrounding the binding groove is almost completely hydrophobic (Figure 2*a*). The region adjoins a basic ring that circumscribes the midsection of the domain surface. NMR studies in short-chain lipid micelles (145) and surface pressure analysis of C1 domain mutants of PKCα (84) confirmed the prediction that the hydrophobic region penetrates into the membrane interior while the basic ring contacts the membrane surface (146). There is an exceptionally strong synergism between diacylglycerol or phorbol ester binding and membrane binding (86), and the presence of diacylglycerol or phorbol ester is required for targeting of C1 domains to membranes. The monomeric phorbol ester head group binds 10^4-fold more weakly than tetradecanoyl phorbol acetate presented in mixed micelles (63). The synergistic binding is explained by the two types of binding surfaces: a stereospecific diacylglycerol-phorbol ester-binding site in a groove surrounded by a nonstereospecific membrane-binding site. Binding of either diacylglycerol or bulk membrane to its site alone leaves interactions with other sites unsatisfied; hence simultaneous binding is favored.

C1 domains from PKCγ can translocate from the cytosol to the plasma membrane within a few seconds after addition of diacylglycerol (95). Free fatty acids can stimulate PKC translocation to a variety of different cell compartments depending on the isozyme (117), yet specific binding to PKC C1 and C2 domains has not been documented. Free fatty acids could modulate the nonspecific interactions of PKC-C1 or PKC-C2 with membranes.

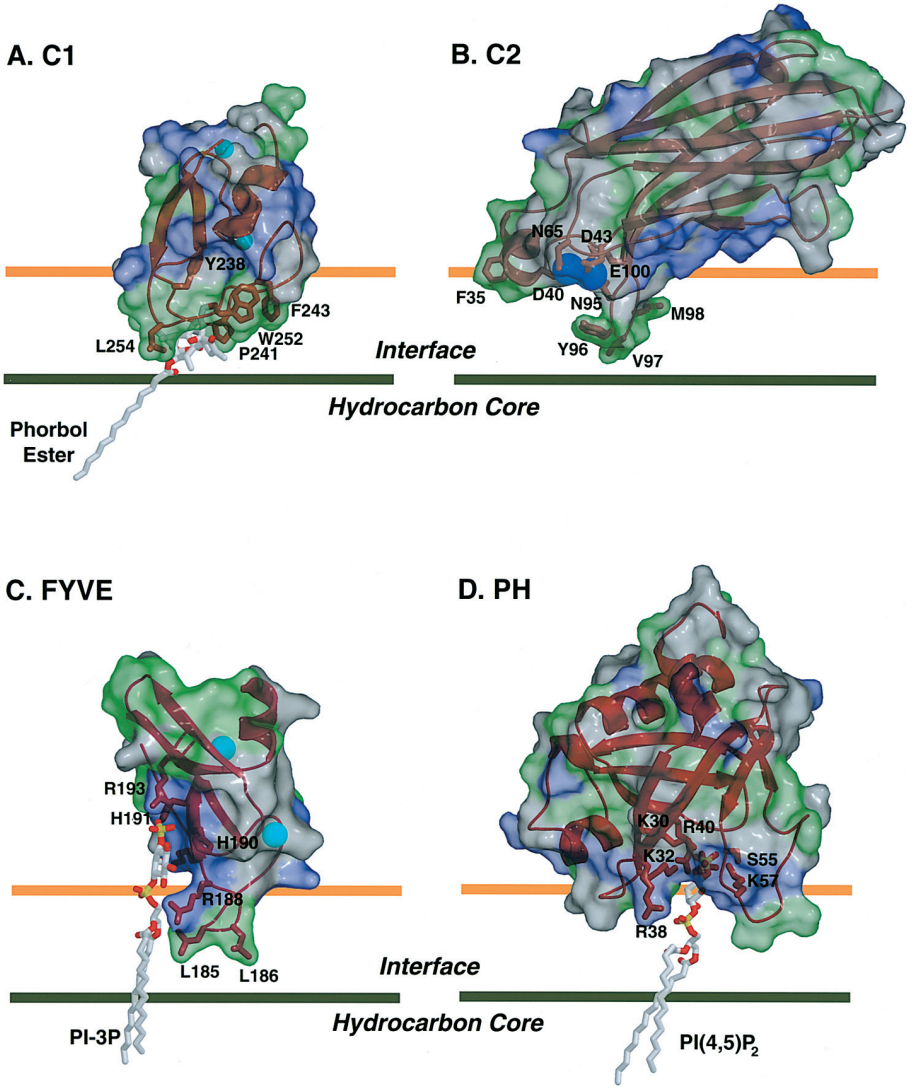

Figure 2 Membrane-docked structures of (*a*) PKCδ-CIB phorbol ester complex with the myristoyl tail modeled (146), (*b*) cPLA$_2$-C2 Ca^{2+} complex (102), (*c*) Vps27p-FYVE with PI3P modeled (85), and (*d*) PLCδ1-PH complex with Ins (1, 4, 5) P_3, with dimyristoyl group modeled (31). The secondary structure and molecular surface of each domain are shown. Surface colors indicate the underlying resudie type: hydropbic (*green*) or basic (*blue*). Selected specific- and nonspecific-contact residues are shown. Domains are positioned so that knwn membrane-interacting residues penetrate the membrane and basic patches are proximal to the membrane surface. The membrane leaflet is divided into an interfacial zone and a hydrophobic core (each ~15 Å thick) and is drawn to scale. The two bound zinc ions in part *a* and *c* and are shown in *cyan*. The two bound Ca^{2+} ions in part *b* are shown in *blue*.

Predicting C1 Domain Function from Sequence

The structure of the C1-phorbol ester complex and its nonspecific membrane-binding surface depend on the conservation of a number of amino acids in the group of "typical" C1 domains that do bind diacylglycerol and phorbol ester (Figure 1*a*). The typical C1 domains conserve both the large hydrophobic residues that form the nonspecific binding surface and three structural residues (a Pro, Gly, and Gln) involved in the stabilization of the binding groove (64, 146). Counting from the first conserved His, the consensus motif for the typical C1 domains begins at Pro-11:PXArCX_2CX_2Hy_3G$X_{0\text{-}1}$HyX_2QG, where X is any amino acid; Ar is Phe, Trp, or Tyr; Hy is any hydrophobic residue; and residues involved in groove formation or membrane penetration are shown in bold (64, 146). This signature is inconsistent with the properties of synthetic peptide models for PKC C1 domains (58), although the motif has been largely successful in predicting the properties of naturally occurring and recombinant C1 domain-containing proteins. For example, this motif is present in the most recently discovered C1 domain, that of RasGRP (24). RasGRP is targeted to cell membranes in response to diacylglycerol via its C1 domain (131), revealing a new pathway from diacylglycerol to Ras signaling.

Atypical C1 domains occur in two large groups of proteins: the diacylglycerol kinases (DAGKs) (132) and effectors and regulators of small G-proteins. The function of the DAGK C1 domains is mysterious. None of these kinases is known to bind phorbol ester, and the C1 domains of DAGKα are dispensable for catalytic activity (113, 132). The atypical C1 domain of Raf is involved in allosteric regulation of this protein kinase by activated Ras, although the primary binding site for Ras lies elsewhere, on the Raf-RBD domain. Several regions on the surface of the Raf-C1structure (87) appear to be involved in autoinhibitory interactions in the inactive conformation of Raf (18, 19). At least one epitope, comprising Lys-144 and Leu-160 of c-Raf-1, overlaps with the phorbol ester-binding site on the typical C1 domains and probably has direct interactions with Ras (19).

Multi-C1-Domain Proteins: the Contribution of Context

In most of the PKCs and DAGKs, C1 domains occur in pairs. The function of individual C1 domains depends on their context in the larger protein, as illustrated by the interdependent allosteric activation of PKC by various lipids (93, 119). The diacylglycerol-binding sites on the C1 domains of PKCγ are obstructed in the inactive cytosolic form of the enzyme, as judged by translocation kinetics in vivo (94). Diacylglycerol binding to the C1 domain is believed to be coupled to a large-scale conformational change that alters the interactions of the C1 domains with the kinase catalytic domains, thereby allosterically activating the enzyme (53, 93, 94). PKCδ and PKD/PKCμ both contain two C1 domains, C1A and C1B. For these isozymes, the C1B contributes to phorbol ester–stimulated translocation by an

order of magnitude more than the C1A (57, 128). It remains to be seen whether other PKCs follow this pattern.

C2 DOMAINS

C2 domains are ∼120-residue domains that were originally discovered as a conserved sequence motif in the Ca^{2+}-dependent PKCs. There are now ∼600 C2 domains identified in >400 different proteins (see above regarding numbers taken from the SMART database). Much of the intense interest in these domains arises from the roles of C2 domain proteins not only in signal transduction, but also in inflammation, synaptic vesicle trafficking and fusion, and many other cell processes (89, 110). Many, but not all, C2 domains bind phospholipid membranes in the presence of Ca^{2+}. Some C2 domains bind membranes constitutively and do not bind Ca^{2+} at all. Other C2 domains bind proteins instead of membranes, using both Ca^{2+}-dependent and -independent mechanisms. Still other C2 domains bind soluble inositol polyphosphates, usually in a Ca^{2+}-independent manner.

Structure of the C2 Domain

Structures of five different C2 domains are now known: the C2A domain of synaptotagmin I (SytI) (126) and the C2 domains of PKC-β (126) and PKC-δ (98) and of phospholipases A_2 ($cPLA_2$) (21, 102, 144) and C-δ1 (PLCδ1) (27, 44). The structure of the C2 domain is a β sandwich related to the immunoglobulin fold (45). Two permutations of the C2 fold occur, known as types I (S-type) and II (P-type), in which the sequence starts at a position in the β sheet offset by a single strand in one as compared with the other (Figure 3*a*). The Ca^{2+}-binding sites are formed by three loops at one tip of the structure. The loops, known as the Ca^{2+}-binding regions (CBRs), correspond structurally to the antigen-binding complementarity-determining regions of antibody Fabs. In addition to forming the Ca^{2+}-binding sites of the Ca^{2+}-dependent class of C2 domains, the CBRs are involved in phospholipid specificity and probably in other ligand-binding interactions.

Figure 3 *a.* Structure-based alignment of C2 domains. Membrane-binding residues and specific Ca^{2+}-binding residues are boxed. Residues that bind Ca^{2+} through the backbone are not indicated. The Ca^{2+} sites in which the ligands participate are marked by Roman numerals. All of the ligands for a given Ca^{2+} site must be present in a given sequence for the site to be functional. Two permuted C2 secondary structures are shown above and below the alignment. The three calcium-binding loops (CBRs) are bracketed. The atypical PKCδ-C2 domain does not bind Ca^{2+}. *b.* Schematic of the Ca^{2+}-binding sites in C2 domains. Site I is occupied in $cPLA_2$ (cp) and PLCδ1 (pl); site II is occupied in all Ca^{2+}-binding C2 domains; and sites III and IV are known or predicted to be bound in PLCδ1, SytI-C2A (sy), and PKCβ (pb). MES, 2-[N-morpholino]ethanesulfonic acid.

(a)

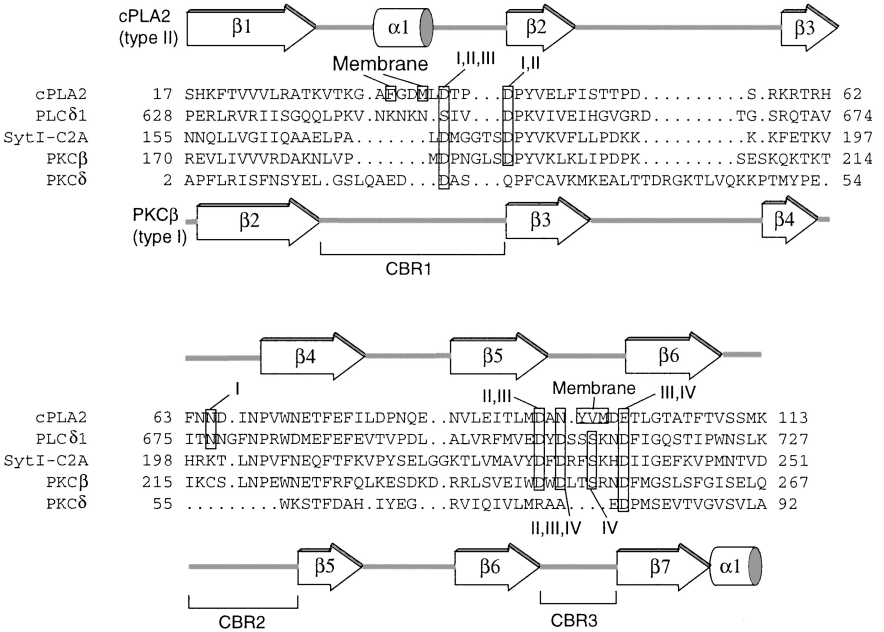
cPLA2
(type II)
β1
α1
β2
β3
Membrane
I,II,III
I,II
cPLA2 17 SHKFTVVVLRATKVTKG.AEGDMLDTP...DPYVELFISTTPD.....S.RKRTRH 62
PLCδ1 628 PERLRVRIISGQQLPKV.NKNKN.SIV...DPKVIVEIHGVGRD.....TG.SRQTAV 674
SytI-C2A 155 NNQLLVGIIQAAELPA.....LDMGGTSDPYVKVFLLPDKK.....K.KFETKV 197
PKCβ 170 REVLIVVVRDAKNLVP.....MDPNGLSDPYVKLKLIPDPK.....SESKQKTKT 214
PKCδ 2 APFLRISFNSYEL.GSLQAED...DAS...QPFCAVKMKEALTTDRGKTLVQKKPTMYPE. 54
PKCβ
(type I)
β2
β3
β4
CBR1
β4
β5
β6
I
II,III
Membrane
III,IV
cPLA2 63 FNND.INPVWNETFEFILDPNQE..NVLEITLMDAN.YVMDETLGTATFTVSSMK 113
PLCδ1 675 ITNNGFNPRWDMEFEFEVTVPDL..ALVRFMVEDYDSSSKNDFIGQSTIPWNSLK 727
SytI-C2A 198 HRKT.LNPVFNEQFTFKVPYSELGGKTLVMAVYDFDRFSKHDIIGEFKVPMNTVD 251
PKCβ 215 IKCS.LNPEWNETFRFQLKESDKD.RRLSVEIWDWDLTSRNDFMGSLSFGISELQ 267
PKCδ 55 .....WKSTFDAH.IYEG...RVIQIVLMRAA....EDPMSEVTVGVSVLA 92
II,III,IV
IV
β5
β6
β7
α1
CBR2
CBR3

(b)

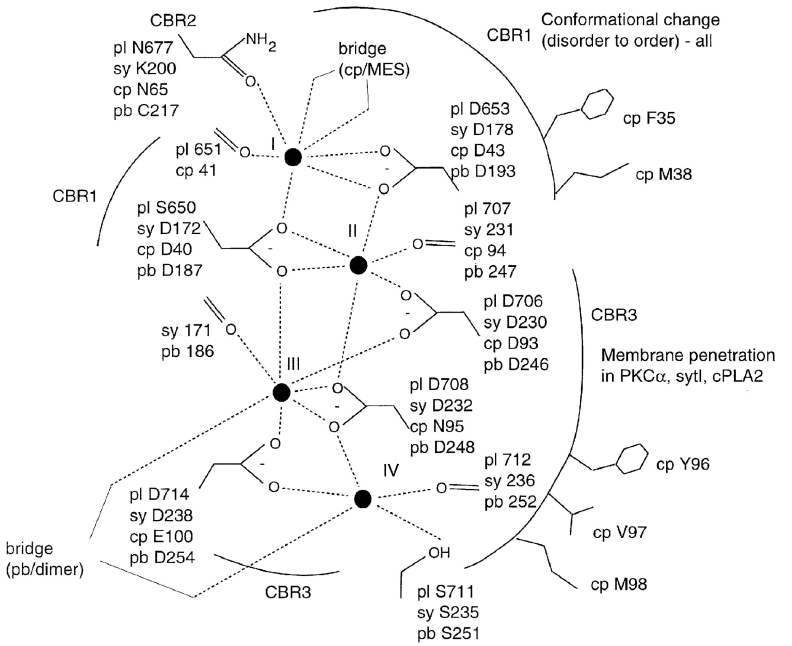
CBR2
pl N677
sy K200
cp N65
pb C217
NH2
bridge
(cp/MES)
CBR1
Conformational change
(disorder to order) - all
pl D653
sy D178
cp D43
pb D193
cp F35
cp M38
pl 651
cp 41
I
CBR1
pl S650
sy D172
cp D40
pb D187
II
pl 707
sy 231
cp 94
pb 247
pl D706
sy D230
cp D93
pb D246
CBR3
sy 171
pb 186
III
Membrane penetration
in PKCα, sytI, cPLA2
pl D708
sy D232
cp N95
pb D248
IV
pl 712
sy 236
pb 252
cp Y96
pl D714
sy D238
cp E100
pb D254
cp V97
bridge
(pb/dimer)
CBR3
OH
cp M98
pl S711
sy S235
pb S251

Ca^{2+}-Binding Sites

Ca^{2+}-binding affinities are strongly dependent on the presence of phospholipid or other ligands. $cPLA_2$-C2 binds two Ca^{2+} in the presence or absence of membrane (Figure 3*b*) (92, 102, 144). SytI-C2A and PKCβ-C2 bind three ions, although binding to the third site is immeasurably weak in the absence of an exogenous acidic ligand (125, 134). PLCδ1-C2 binds three ions in the absence of ligands (28, 46). A hypothetical fourth site exists on PLCδ1-C2, corresponding to the very low-affinity third site on SytI, but this has not been confirmed. The individual Ca^{2+} sites within a C2 domain have distinct functions in binding and enzyme activation (7, 83).

Membrane-Binding Sites

There is an emerging consensus on the membrane-docking modes of Ca^{2+}-dependent membrane-binding C2 domains (Figure 2*b*). The structures of the PLCδ1-C2 and cPLA2-C2 are known in the context of the larger enzyme (21, 27, 44). The presence of the phospholipase active sites in the same structure provides a powerful constraint on the orientation of the C2 domain with respect to the bilayer, which led to a detailed model of C2-membrane docking (44). The membrane-docked PLCδ1-C2 placed the CBR3 region closest to the membrane and juxtaposed the Ca^{2+}-binding sites with the membrane surface. In this model, the concave face of the C2 structure and strand β3 in particular face the membrane surface across a distance of 5–10 Å. The overall orientation is similar for $cPLA_2$-C2, but this C2 domain has a larger and more hydrophobic CBR1 than that of PLCδ1-C2 (21, 102, 144).

The inferences from structures have been confirmed and elaborated on by functional studies. Trp residues incorporated into the SytI-C2A and $cPLA_2$-C2 domains as fluorescent reporters reveal membrane penetration by SytI-C2A's CBR1 (13) and both CBR1 and CBR3 of $cPLA_2$-C2 (90, 103). NMR of SytI-C2A (12) and NMR and EPR studies of $cPLA_2$-C2 support this picture (4, 144). Scanning mutagenesis and surface pressure measurements on PKCα (84) and $cPLA_2$ (7) came to similar conclusions. NMR suggests that residues on the concave face of $cPLA_2$-C2 sense an altered environment when bound to the membrane (144). However, mutagenesis of the concave faces of PKCβII-C2 (61) and cPL A_2-C2 (7) show that this region does not contribute substantially to membrane binding even though it is oriented toward the membrane surface.

Phospholipid Specificity and Subcellular Localization

Most Ca^{2+}-dependent C2 domains bind acidic phospholipids (89, 110), and PLCδ1-C2 was most recently added to this group (81). $cPLA_2$-C2, in contrast, seems to prefer neutral membranes, especially phosphatidylcholine (PC) (91). $cPLA_2$ also binds phosphatidylmethanol, and it has been suggested that small head groups promote binding by favoring the bilayer insertion of $cPLA_2$-C2 (51). The differences

in specificity correlate with the structures of the CBRs and with the ionic strength dependence of the interaction. The CBR3 of SytI and many other acidic phospholipid-binding C2 domains contains basic residues, whereas hydrophobic residues predominate in $cPLA_2$. $cPLA_2$ also contains a helix in its CBR1 that inserts part of its hydrophobic surface into the membrane (4, 7, 90, 102, 103, 144). This helix is not present in the acidic phospholipid binders. Consistent with these ideas, SytI-C2/membrane binding is attenuated by >500 mM NaCl, the signature of an electrostatic interaction, whereas $cPLA_2$-C2 binding is not (20). An aromatic cluster specific to the $cPLA_2$-C2 structure is predicted to form a choline head group-binding site that may explain the preference for PC over other zwitterionic lipids (144).

Subcellular localization of C2 domains correlates with their phospholipid specificity. PKCα–C2 (16) and PKCγ (94) translocate to the plasma membrane, rich in the acidic phospholipid phosphatidylserine (PS), when free [Ca^{2+}] increases. This is vividly illustrated by the plasma membrane translocation of PKCγ coincident with Ca^{2+} oscillations (94). In contrast, increased cytoplasmic [Ca^{2+}] induces intact $cPLA_2$ and $cPLA_2$-C2 to translocate to the PC-rich nuclear envelope and endoplasmic reticulum (43, 103).

Mechanism of Ca^{2+}-Dependent Membrane Binding

Three mechanisms by which Ca^{2+} could promote membrane binding by C2 domains have been widely discussed. The first is the "Ca^{2+} bridge" model. The second model invokes a conformational change in which the structure of the CBRs is altered by Ca^{2+} binding such that their ability to bind membranes is increased. The third is the "electrostatic switch" mechanism. These three mechanisms are not necessarily mutually exclusive, nor do they exhaust the possibilities.

The Ca^{2+} Bridge Model In the Ca^{2+} bridge model, Ca^{2+} ions are specifically coordinated by functional groups provided by both the C2 domain and by phospholipids. The annexins provide a precedent (127). The membrane-docked position of the C2 domain tip at the bilayer surface is consistent with a Ca^{2+} bridge. All efforts at forming specific Ca^{2+}-bridged complexes between C2 domains and short-chain phospholipids have thus far disappointed. However, a structure of a Ca^{2+}-bridged complex between the $cPLA_2$-C2 and the sulfonate moiety of a morpholineethanesulfonic acid buffer ion has been reported (21; Figure 3*b*). The 10 Å between the putative choline site and Ca^{2+} site I suggests that a single PC molecule would be unlikely to both coordinate Ca^{2+} and occupy the choline pocket. The crystal structure of the PKCβ-C2 (125) reveals a Ca^{2+}-bridged protein dimer that provides a different model for chelation in the putative phospholipid complex (Figure 3*b*). This model would position the phosphodiester ~8 Å nearer to the membrane center (or the protein 8 Å farther from it) than would be suggested by the $cPLA_2$-C2 [N-morpholino]ethanesulfonic acid complex. Arguing against a bridge mechanism, $cPLA_2$-C2 is capable of Ca^{2+}-dependent partitioning to pure

Triton micelles (20). It appears that Ca^{2+} bridging is an important contributing factor but cannot on its own serve as a general explanation for all Ca^{2+}-dependent membrane binding by C2 domains.

Ca^{2+} Induced Conformational Changes The structure of a truncated PLCδ1 has been determined in two different crystal forms, cubic and triclinic. In the "apo-" form of the triclinic crystal, CBR1 is almost completely invisible in electron density owing to disorder. Ca^{2+} analog binding in the triclinic form induces a disorder-to-order conformational change in which CBR1 adopts a well-defined conformation (44). In the cubic-crystal form, CBR1 is ordered in both apo- and bound structures (28). CBR1 in the cubic form interacts extensively with crystal packing contacts, explaining the apparent lack of a conformational change. Movement of the CBR1 in the triclinic form is much less restricted. With the exception of PLCδ1, all crystallized Ca^{2+}-dependent C2 domains have been grown only in a single Ca^{2+} ligation state. SytI-C2A was crystallized as an apodomain, but it can bind one Ca^{2+} ion in the crystal (126). Binding of additional ions shatters the SytI-C2A crystals, strongly suggesting a conformational change. Comparison of the crystal structures of closely related apo-SytI-C2A (126) and Ca^{2+}-saturated PKCβ-C2 (125) reveals that the CBR1 moves 1–2 Å and its mobility relative to the rest of the domain decreases fourfold, again consistent with an increase in order in the bound state. Taken together these data reveal a consistent pattern of Ca^{2+} effects on C2 domain conformation.

Fluorescence spectroscopy of the SytI (13) and $cPLA_2$-C2 (92) domains indicates substantial Ca^{2+}-induced conformational changes that extend some distance from the binding site. Chemical modification of $cPLA_2$-C2 with TID increases several-fold on Ca^{2+} binding (20), consistent with a conformational change that exposes more hydrophobic surface area, although ANS binding does not increase. NMR of SytI-C2A reveals many CBR NOEs in the bound state that decrease or disappear in the apostructure, consistent with a disorder-to-order conformational change upon Ca^{2+} binding (116). NMR of cPLA2-C2 reveals large Ca^{2+}-induced chemical-shift perturbations that are greatest for the CBRs but extend beyond them (144). There is now overwhelming evidence that conformational changes do occur in C2 domains when they bind Ca^{2+}, despite statements to the contrary (110). It is still not clear how much these conformational changes contribute to Ca^{2+}-dependent membrane binding.

Electrostatic Interactions with Membranes

The electrostatic switch model is based on the change in electrostatic potential at the tip of the C2 domain from negative to positive upon Ca^{2+} binding (110, 148). The electrostatic switch model is not general because it cannot explain the neutral lipid-specific C2 domains exemplified by $cPLA_2$. There is no doubt that electrostatic interactions are involved in the membrane binding of acidic phospholipid-specific C2 domains, because the interaction can be abolished by increasing ionic

strength (20, 148). The key question is whether a nonspecific electrostatic interaction is both necessary and sufficient for binding, as opposed to a necessary role for specific interactions with Ca^{2+} ions. A charge reversal mutant that increases the net charge in the CBRs of PKCβII-C2 by +4 severely impairs Ca^{2+}-dependent binding but does not confer Ca^{2+}-independent binding (26). This result rules out the electrostatic switch model as applied to the anionic lipid-binding class of C2 domains (26).

A little discussed but potentially important model invokes a decrease in Born repulsion after Ca^{2+} binding (D Murray, B Honig & S McLaughlin, personal communication). Born repulsion is the force that keeps ions out of the low dielectric medium of membrane and protein interiors. There is a substantial Born energy penalty for bringing ions near a low dielectric medium even if they do not enter it. By nearly neutralizing the net negative charge on the tip of the C2 domain, this penalty might be reduced. No experiments specifically designed to test this idea have been reported to date. The failure of the PKCβII-C2 charge reversal mutant (26) to bind membranes rules this mechanism out for the conventional PKC-like acidic lipid-specific C2 domains, but it has yet to be tested for $cPLA_2$-C2. In short, no single mechanism can account for all of the Ca^{2+}-dependent C2 domains. Conventional PKCs, SytI-C2A, and many similar proteins probably rely heavily on the Ca^{2+} bridge mechanism, whereas $cPLA_2$ may depend more on the conformational change or Born mechanisms or both.

Ca^{2+}-Independent C2 Domains

Not all C2 domains bind Ca^{2+} ions. Little is known of the function of these C2 domains. The Ca^{2+}-independent C2 domains of the AplII PKC (101) and PI3K-C2β (3) bind phospholipids with low affinity and little specificity. There are enough structural data on C2 domains to predict which domains will bind and which will not. The sequences of the Ca^{2+}-independent class show that most or all Ca^{2+} ligands are absent. The structure of the Ca^{2+}-independent PKCδ-C2 confirms the expected absence of the usual acidic pocket (98). The CBRs in the PKCδ-C2 are in sharply different conformations from those in other C2 domains. This suggests that more is required to create a Ca^{2+}-independent membrane-binding site than the mere removal of the Ca^{2+}-binding Asp residues.

Interdomain Interactions

The structures of PLCδ1 and $cPLA_2$ show differing degrees of interaction between C2 and the rest of the protein. The PLCδ1-C2 interacts extensively with the catalytic and EF hand domains of the enzyme, although the CBRs are not occluded (27, 44). The extensive contact surfaces of the PLCδ1-C2 suggest that it may contribute to structural stabilization. In contrast, $cPLA_2$-C2 has almost no interactions with the catalytic domain and can pivot through an angle of $\geq 10^\circ$ (21). Kinetics suggest that the PKCγ-C2, like the other two, is oriented in an "outside-out" manner such that its CBRs are not occluded by the rest of the protein (94). Despite the

"outside-out" orientation, Ca^{2+} binding to particular subsites within the C2 domain appears able, directly or indirectly, to trigger activating long-range conformational changes in PKCα and in $cPLA_2$ (7, 83).

FYVE DOMAINS

The FYVE domains, so far identified in ~60 proteins (see above regarding numbers taken from the SMART database), are the mostly recently characterized addition to the family of membrane-binding modules. FYVE domains are ~70- to 80-residue domains containing 8 Cys or 1 His and 7 Cys residues that coordinate two Zn^{2+} atoms (42, 123, 141). FYVE domains are involved in endosomal localization of proteins crucial for membrane trafficking in yeast (141) and mammals (118, 123). The current fascination with FYVE domains was triggered by the 1998 discovery that effectors of class III phosphatidylinositol (PI) 3-kinases are localized by binding PI 3-phosphate (PI3P) via their FYVE domains (10, 41, 99). FYVE domains bind PI3P but not more highly phosphorylated phosphoinositides (10, 41, 99).

FYVE Domain Structure, Ligand Binding, and Specificity

The crystal structure of the FYVE domain from Vps27p (85), a protein involved in endosomal maturation in yeast, reveals a compact core consisting of two small double-stranded β sheets and a C-terminal α-helix (Figure 2*c*). The structure is distantly similar to that of the C1 domain. The Zn^{2+}-chelating Cys/His residues are located in pairs such that the first and third pairs bind one zinc atom, while the second and fourth pairs bind the other zinc atom. The surface of Vps27p-FYVE contains a relatively large basic region contributed by the conserved RKHHCR motif located near and on β1 and by a conserved arginine from the β4 strand (Figure 4*a*,*b*). Mutagenesis of the RKHHCR motif results in loss of PI3P binding (10). The sequence (R/K)(R/K)HHCR is present in all known PI3P-binding FYVE domains, although there are structurally similar domains that lack this motif (97). The basic region is divided into two subsites consisting of the first two and the last four residues of the RKHHCR motif. PI3P can be modeled so that its 1-phosphate interacts with the first two residues of the motif, while the 3-phosphate interacts with a tight pocket formed by the last three basic motif residues and the Arg

Figure 4 *a*. Structure-based alignment of FYVE domains and the related rabphilin Zn^{2+}-binding domain. Zn^{2+}-binding residues are shown in bold. PI3P binding and membrane interacting residues are boxed. The rabphilin Zn^{2+}-binding domain is structurally similar to FYVE domains but does not have the boxed PI3P-binding residues and is predicted not to bind PI3P. *b*. Schematic of the PI3P-binding site of the FYVE domain. The phosphoinositide is intentionally drawn as an oversimplified achiral molecule to emphasize the pseudo-twofold relationship between PI3P and PI5P. Equivalent residues from the Vps27p (*black*) and EEA1 (*gray*) FYVE domains are shown. Trp170/1348 does not bind PI3P, but helps to buttress His191/1372 and the ligand-binding site.

(a)

```
                                   Membrane  1' PO4   3' PO4
Vps27     168 ADWID...SDACMICSKK.FS.LLNRKHHCRSCGGVFCQ....EH 203
Fab1      235 EYWMKDESSKECFSCGKT.FN.TFRRKHHCRICGQIFCS....SC 273
FGD1      725 PTPIREKEVTMCMRCQE.PFNSITKRRHHCKACGHVVCG....KC 764
Vac1      210 TPWRDDRSVLFCNICSE.PFG.LLLRKHHCRLCGMVVCDDANRNC 252
EEA1     1346 RKWAEDNEVQNCMACGK.GFS.VTVRRHHCRQCGNIFCA....EC 1384

Rabphilin  89 ......DGVNRCILCGEQ.LGMLGSACVVCEDCKKNVCT....KC 122
```

```
                                                  3' PO4
Vps27     204 SSNSIPLPDLG..................IYEPVRVCDSCFEDY 229
Fab1      274 TLLIDGDRFGC..................HAKMRVCYNCYEHA 298
FGD1      765 SEFRARLVYD...................NNRSNRVCTDCYVAL 789
EEA1     1385 SAKNALTPSS...................KKPVRVCDACFNDL 1408
Vac1      253 SNEISIGYLMSAASDLPFEYNIQKDDLLHIPISIRLCSHCIDML 296

Rabphilin 123 GVETS.NNRP....................HPVWLCKICLEQR 144
```

Bold = Zn^{+2} ligands

(b)

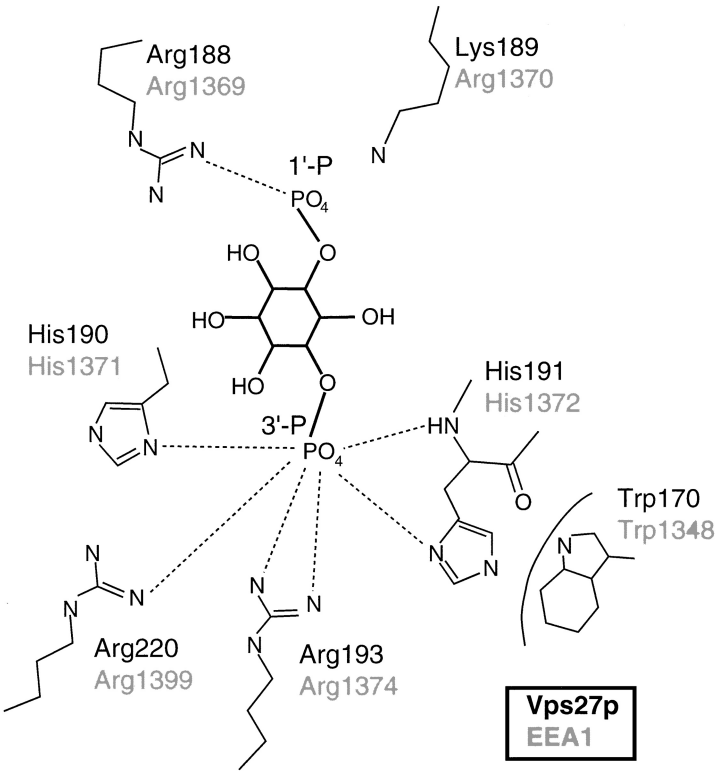

contributed by $\beta 4$. In support of this model, the chemical shifts of the corresponding residues in early endosomal antigen-1 (EEA-1) exhibit the largest perturbations upon titration with a water-soluble PI3P (71).

FYVE domains are specific for PI3P, showing negligible affinity for PI4P, polyphosphorylated phosphoinositides, or other phospholipids (10, 41, 99). Specificity is probably controlled by the distance between the two phosphate-binding subsites. This distance appears too short to tolerate binding of the 1- and 4-phosphate groups of PI4P to their respective sites simultaneously. The 3-phosphate binding pocket is too occluded to permit binding of polyphosphorylated phosphoinositides such as those that bind to PH domains. EEA1-FYVE binds to PI5P but probably too weakly to be meaningful in vivo (71). The basic phosphate-binding residues are sufficiently well conserved that it seems likely most of the as-yet-uncharacterized FYVE domains will have similar ligand specificity. It is also possible that other FYVE domains could have higher affinities for PI5P than EEA1.

FYVE Domain Binding to Membranes

The FYVE domain binds to PI3P-containing membranes such that the tip of the N-terminal loop penetrates into the bilayer (Figure 2*c*). This part of Vps27p-FYVE has two successive Leu residues that form an exposed hydrophobic protrusion at one end of the domain (85). The NMR resonances from the corresponding region from EEA1-FYVE disappear upon binding to PI3P-containing micelles (71), suggesting that the residues penetrate the micelle. In addition, mutation of two of these residues (Val and Thr) eliminates endosomal localization in vivo (71). This region contains two or more hydrophobic residues in most FYVE domains. The hydrophobic protrusion is also present in the FYVE-like Ze^{2+}-binding domain of rabphilin-3A, suggesting a function for this domain in nonspecific membrane binding. In Vps27p, several lysines not involved in PI3P binding are located at the base of the protrusion (85). These lysines are poorly conserved and do not show main-chain chemical shift perturbations by micelles (71), but other sequences contain positively charged residues that map to similar parts of the domain surface. It appears likely that the hydrophobic protrusion penetrates into membranes, whereas the basic residues at the base of the protrusion interact nonspecifically with the membrane.

FYVE domain-containing proteins and FYVE domains localize to endosomal membranes containing PI3P (10, 41, 96, 99, 118, 123, 133). Endosomal localization can be blocked when PI3-kinase is inhibited with wortmannin. Although isolated FYVE domains can bind to PI3P-containing membranes, the membrane avidity of FYVE-domain containing proteins may be increased by dimerization (11, 71). EEA1-FYVE has limited ability to dimerize. However, FYVE domain-GST fusions form dimers that exhibit increased binding to PI3P-containing liposomes (71). The full-length EEA1 protein is predicted to homodimerize by

forming a parallel coiled coil, so that the two C-terminal EEA1-FYVE domains are located near each other at one end of the dimer (11).

PLECKSTRIN HOMOLOGY DOMAINS

PH domains have been found in >500 cell regulatory proteins (see above regarding numbers taken from the SMART database). Most PH domains bind phosphoinositides, albeit with varying degrees of specificity (8, 34, 48, 73, 109). As such, they respond directly to free phosphoinositide levels regulated by phosphoinositide kinases, phosphatases, and phospholipases. The discovery over the past 3 years that signaling through PI3-kinases depends on PH domain-containing effectors has led to intense and renewed interest in these domains (34, 72). PH domains also participate in protein-protein interactions with such partners as G$\beta\gamma$ subunits and PKC-C1 domains; this aspect of PH domains has been extensively reviewed elsewhere (8, 73, 109).

Structure of the PH Domain

Structures are now known for PH domains from eight different proteins: pleckstrin (49, 143), spectrin (55, 82, 147), dynamin (23, 30, 38, 130), PLCδ1 (31), son of sevenless 1 (Sos1) (69, 151), β-adrenergic receptor kinase (βArk) (39), Bruton's tyrosine kinase (Btk) (5, 56), and insulin receptor substrate 1 (IRS-1) (22). The PH domain structure contains two orthogonal antiparallel β sheets of three and four strands (Figure 2*d*). These are followed by a C-terminal α helix. The β sheets curve in a tight barrel-like conformation, while the C-terminal helix folds in to cover one end of the barrel. This fold is also found in the protein-binding phosphotyrosine binding (PTB) (25, 149, 152), enabled/VASP homology (EVH) (106), and Ran-binding (RanBD) (138) domains and as a substructure within the protein- and phospholipid-binding 4.1, ezrin, radixin, and moesin (FERM) domain (M Pearson, D Reczek, A Bretscher, PA Karplus, submitted for publication). The interstrand loops are involved in ligand binding and vary substantially in sequence and structure between PH domains. The membrane-binding face of the domain contains basic residues that assist in ligand binding.

Inositol Phosphate-Binding Subsites

The structures of complexes of PLCδ1-PH with Ins(1,4,5)P_3 (31) and Btk-PH with Ins(1,3,4,5)P_4 (5) define four different phosphate-binding subsites that participate in high-affinity specific phosphoinositide binding (Figure 5*a*). The general outlines of the binding site are the same for PH domains of pleckstrin (48, 49), dynamin (114, 150), Sos1 (151), and βArk (39), based on NMR chemical-shift perturbations. In both structures, the β1/β2 and β3/β4 loops of the first β sheet

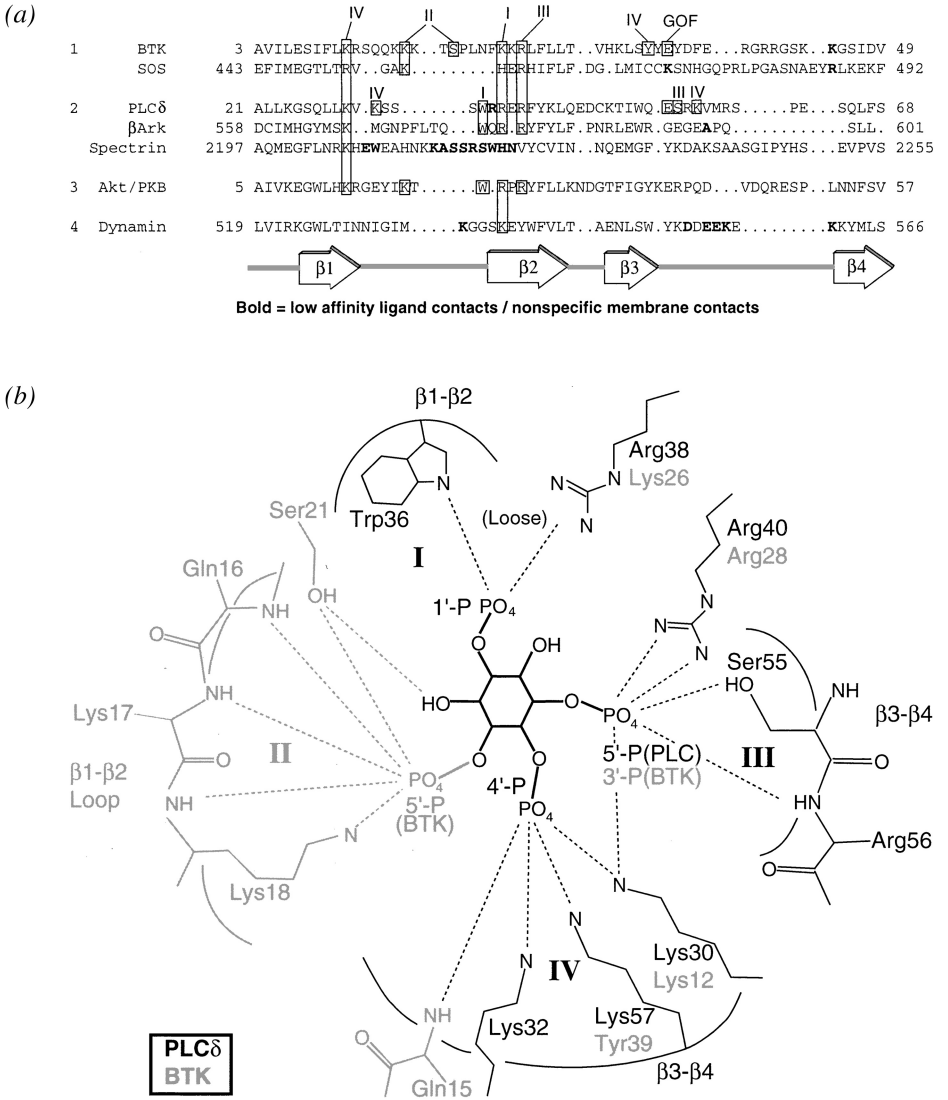

Figure 5 *a*. Structure-based alignment of PH domains (there is no structure available of the Akt-PH, which has been aligned by sequence homology). Examples of each of the four provisional PH domain groups (34, 107) are shown. Residues that interact nonspecifically with the membrane or with ligands are shown in bold. Residues that interact directly with ligands are boxed. *"GOF"* designates the Btk and PLCδ1 E $\rightarrow$ K mutants that increase membrane affinity. Phosphate-binding subsites are marked with Roman numerals. Conservation of residues in all four subsites suggests, but does not prove, membership in group 1. Group 3 sequences are similar to group 1 but with fewer basic residues in the site II ($\beta 1/\beta 2$ loop) region. The absence of sites II–IV suggests membership in group 4. *b*. Schematic of the high-affinity phosphoinositide-binding site of PLCδ1-PH and Btk-PH. Structural elements found only in Btk are drawn in gray. Elements found in PLCδ1only or in both PH domains are drawn in black. The bound phosphoinositide is intentionally drawn as an oversimplified achiral molecule, as in Figure 4*b*, to emphasize the pseudo-twofold relationship between the PI(4,5)P_2- and PI(3,4,5)P_3-binding modes.

form most of the key interactions. In PLCδ1-PH, Ins(1,4,5)P_3 is buried between the 2 loops and forms 12 hydrogen bonds to 9 different amino acids of the domain. Interactions are even more extensive in Btk-PH, involving 18 hydrogen bonds. This is consistent with the higher affinity of the latter for its cognate ligand, 40 nM (36), as compared with 210 nM for PLCδ1-PH (74).

The 1- and 4-phosphates of Ins(1,4,5)P_3 and Ins(1,3,4,5)P_3 bind to equivalent subsites (denoted I and IV in Figure 5*a*) in PLCδ1-PH and Btk-PH. Subsite I is relatively solvent exposed and poorly defined. Subsite IV is buried and makes at least three close interactions with the 4-phosphate in both structures. Subsite IV is more positively charged in PLCδ1-PH compared with Btk-PH. There is one dramatic difference between the two structures; the inositol ring of the ligand is rotated about the axis defined by the 1- and 4-carbons of the inositol ring. Thus the 3-phosphate of Ins(1,3,4,5)P_4 bound to Btk-PH occupies the subsite (III) belonging to the 5-phosphate of Ins(1,4,5)P_3 bound to PLCδ1-PH. The critical Arg-28 of Btk participates in subsite III and is conserved in PLCδ1. The 5-phosphate of Ins(1,3,4,5)P_4 occupies a subsite (II) that is created by a unique loop conformation in Btk-PH. Subsite II is missing in PLCδ1-PH.

Two modes of low-affinity phosphoinositide binding have been defined by the structure of the spectrin-PH-Ins(1,4,5)P_3 complex (55) and by a secondary Ins(1,3,4,5)P_4-binding site in the Btk gain-of-function mutant E41K (5). The Ins(1,4,5)P_3 interacts with spectrin-PH via the $\beta5/\beta6$ loop and the opposite side of the $\beta1/\beta2$ loop from the PLCδ1-PH domain complex. The second Ins(1,3,4,5)P_4 binds to the $\beta3/\beta4$ loop of Btk-PH E41K close to subsite I of the high-affinity binding site. The low-affinity sites are more solvent exposed and involve fewer contacts than those described above. Although they do not overlap, both low-affinity sites are on the membrane-binding face of the PH domain and are consistent with the overall picture of PH domain/membrane interactions inferred from other studies.

Phosphoinositide Specificity

PH domain binding to different phosphoinositide polyphosphates and inositol polyphosphates has been systematically examined (59, 62, 107), revealing a wide range of ligand affinity and specificity. Rameh et al (107, 120) subdivide PH domains into four groups, which provides a useful working classification scheme. PH domains are so divergent that sequence-based classification may not be conclusive for every case. Even classification based on in vitro function is complicated by the variety of soluble inositol polyphosphate- and phosphoinositide-binding assays in use.

Group 1 PI(3,4,5)P_3-binding PH domains include those of Btk (36, 68, 107, 114), Grp1 (62, 65, 66), ARF nucleotide site opening (ARNO) (137), cytohesin-1 (88), Son-of-sevenless (Sos) (107), Tiam-1 N-terminal domain (107), Gap1^{IP4BP}

(17, 79), Gap1^m (37, 80), Vav (47), and several newly identified members (59). They are highly specific for PI(3,4,5)P_3, which they typically prefer over PI(4,5)P_2 by ∼100-fold. Their sequences have more positively charged residues (6–11 residues, including histidines) in the $\beta1/\beta2$ strands and loop than group 2 (Figure 5*b*). In Btk-PH, these additional positive residues contribute to the unique site II, which binds the 5-phosphate. Positive charges predominate in the $\beta1/\beta2$ loop in other group 1 PH domains, suggesting that the binding mode observed in Btk-PH may be general to this group. Subsite IV has fewer charged interactions with the 4-phosphate than in group 2, consistent with the weaker binding of group 1 PH domains to PI(4,5)P_2.

Group 2 The members of the second group have high affinities for PI(4,5)P_2 and PI(3,4,5)P_2 and include PLCδ1 (15, 40, 62, 74), βArk (62, 104, 107), β-spectrin (62, 107), RasGAP (62), the N-terminal domain of pleckstrin (62, 129), DAGKδ (62, 129), oxysterol-binding protein (OSBP) (75, 107), IRS-1 (22), and others (62, 107). Group 2 domains do not discriminate substantially between PI(4,5)P_2 and PI(3,4,5)P_3 in vitro (62, 107). Preferential binding to PI(4,5)P_2 in vivo may be more a function of the greater abundance of this lipid than discrimination against 3-phosphoinositides. PLCδ1-PH binds PI(4,5)P_2 and PI(3,4,5)P_2 with high affinity compared with other acidic lipids (73, 109), but other group 2 PH domains are less specific. In these group 2 domains, unlike PLCδ1-PH, strong binding to PI(4,5)P_3 may depend more on the high negative charge on this lipid than on stereospecific recognition. This is consistent with the imperfect conservation of some of the key PLCδ1-PH basic side chains in group 2 domains.

Group 3 A third group, including Akt (also known as PKB) (32, 33, 59, 60, 62) and PDK1 (1, 124), binds PI(3,4)P_2 as well as PI(3,4,5)P_3. The only other reported member of this group is an expressed sequence tag (EST)-encoded protein of unknown function (62). Group 3 PH domains vary somewhat in their relative affinities for PI(3,4)P_2 vs PI(4,5)P_2 and PI(3,4,5)P_3 in different reports. The $\beta1/\beta2$ loops of group 3 PH domains contain fewer basic residues than many of the group 1 domains, but the structural basis for specificity still is not entirely clear, pending the structure determination of a group 3 PH domain.

Group 4 and Others Group 4 members, which include dynamin and the C-terminal PH domain of TIAM-1, exhibit relatively low binding affinity for the ligands mentioned above. The high-affinity phosphate subsites are absent or incompletely formed in these PH domains. Despite the low affinity of dynamin-PH monomers for PI(4,5)P_2, the physiological importance of this interaction for endocytosis is well established. The effective affinity is bolstered by oligomerization of dynamin (67). PLCβ1- and PLCβ2-PH bind nonspecifically to neutral and acidic phospholipids with low affinity (139). PLCγ-PH binds 3-phosphoinositides, including PI3P (29, 62). Neither its sequence nor its binding affinities conform to groups 1 or 3, so it may represent a new group.

Membrane-Binding Mechanisms

The positively charged face and loops of PH domains are poised to form nonspecific contacts with negatively charged phospholipids, in addition to the specific contacts already described (Figure 2*d*). The importance of nonspecific contacts is highlighted by the structure of the Btk-PH E41K gain-of-function mutant (5, 77). This mutation results in constitutive activation of the protein, probably owing to persistent membrane association (76). The corresponding mutation E54K in PLCδ1 produces a similar gain in enzyme function in vitro (9). The mutation does not increase the affinity for Ins(1,3,4,5)P_4 molecule to the binding pocket. In the crystal, a second Ins(1,3,4,5)P_4 molecule binds to the mutated lysine on the surface of the molecule near β-strands 3 and 4; three other (native) lysine residues complete this second binding site. The mutation increases the positively charged surface on this face of the domain (5), and it may enhance membrane association of the domain nonspecifically, either by generalized binding of negative membrane surface charge or by binding of phosphoinositide lipids other than PI(3,4,5)P_3 (136) at the second binding site.

A loss-of-function Btk mutant, K19E, maps to the $\beta1/\beta2$ loop but does not directly interact with Ins(1,3,4,5)P_4. This mutation does not affect specific ligand binding (5) but decreases the local positive electrostatic potential and nonspecific affinity for the membrane surface. Scanning mutagenesis of the positively charged residues in the PLCδ1-PH (142) shows that some of the surface residues are critical for membrane binding even though they are located outside the binding pocket. Their locations suggest that the $\beta1/\beta2$ and $\beta3/\beta4$ strands and loops interact substantially with the phospholipid head group region of the membrane (Figure 2*d*).

Differences in affinity for soluble inositol phosphates vs the cognate membrane-bound phosphoinositides are postulated to have important regulatory consequences. PLCδ1-PH binds to PI(4,5)P_2 in vesicles with micromolar affinity, but binds to the cognate Ins(1,4,5)P_3 with $K_d = 210$ nM (74). The high binding affinity of PLCδ1-PH to Ins(1,4,5)P_3 may be important in product inhibition of the enzyme (15, 74).

Localization to Cell Membranes

Stimulation of PLC causes repartitioning of green fluorescent protein-PLCδ1-PH from the plasma membrane to the cytosol (35, 50, 122, 135) concomitant with the hydrolysis of PI(4,5)P_2 in the membrane and the rise in soluble Ins(1,4,5)P_3 concentration. The relative contribution of the two factors to translocation is still under debate. Green fluorescent protein-PLCδ1-PH translocation has been used to visualize the coupled intracellular dynamics of Ca^{2+} and Ins(1,4,5)P_3 (50). OSBP-PH translocation to the Golgi depends on PI(4,5)P_2 and at least one other unknown factor (75). Plasma membrane localization of PH domains that bind 3-phosphorylated phosphoinositides has been similarly demonstrated. Examples

include the PH domains of Btk (136), ARNO (137), GAP1^{IP4BP} (79), GAP1^{m} (80), PDK1 (2), and Akt (140). Wortmannin inhibition of PI3K blocks plasma membrane localization of these PH domains.

Roles of PH Domains Within Larger Proteins

PI(4,5)P_2 binding allosterically activates dynamin's GTPase activity (78). Since Ins(1,4,5)P_3 also has this capability (114), some effects of the PH domain on the rest of the protein seem to be independent of membrane binding. Dbl homology (DH) domain-containing proteins act as guanine nucleotide exchange factors for Rho-family GTPases. The DH domains are invariably followed by a PH domain, as for Sos and Vav proteins. A crystal structure of Sos DH-PH suggests that a putative GTPase-binding site is formed by both domains; the interface includes the negatively charged side of the PH domain (121). Ligand binding to the PH domain has been proposed to allosterically modulate the nucleotide exchange activity of Sos, perhaps via ligand-induced conformational changes in the β1-β2 loop. The PH domain of Sos is not required for membrane targeting (14). By the same token, the Rac GTP exchange factor Vav is allosterically activated by PI(3,4,5)P_3 (47).

Various appendages are required for the functioning of certain PH domains. The cytohesin PH domain is followed by a 17-residue polybasic sequence, which is required for high-affinity binding to PI(3,4,5)P_3 (88). The Btk PH domain is followed by a small Btk motif, which binds a single Zn^{2+} atom (56) and has no known role other than structural stabilization. G$\beta\gamma$ binds to the C-terminal helix of βArk-PH (104). The solution structure of βArk-PH reveals that this region belongs to an extension to the C-terminal helix (39), which protrudes past the core of the domain.

The activity of the Akt kinase is allosterically regulated by its PH domain, implying contacts between the PH and other domains. Phosphorylation of Akt by PDK1 is necessary for activation (1, 124). In addition to localizing Akt at the membrane, the PH domain directly regulates the susceptibility of Akt to phosphorylation. Deletion of the PH domain results in higher basal phosphorylation and activity of Akt (112). A working model postulates that the Akt-PH participates in autoinhibitory contacts with the catalytic domain of Akt that are broken upon PI(3,4)P_2 binding.

OTHER MEMBRANE-BINDING DOMAINS

The intensive analysis of data from genome-sequencing projects has probably left few important signaling domains undiscovered (6, 115). Of domains that have been recently identified by sequence analysis, the START domain stands out as a probable lipid-binding signaling domain (105). There are many important roles for basic and amphipathic sequences, often with covalent lipid modifications,

although these sequences are not independently folded and do not qualify as domains. The catalytic domains of many enzymes involved in lipid metabolism contain membrane-interacting hydrophobic ridges and basic loops and patches that may help target them to membranes. Finally, certain SH2 and PTB domains can bind phospholipids (108, 152) in addition to their better known peptide-binding functions.

CONCLUDING REMARKS

Stereospecific and Nonspecific Interactions with Membranes

The unique interplay between specific and nonspecific interactions with membranes sets the lipid-directed class of signaling domains apart from all others. In all of the membrane-binding domains, the specific ligand-binding site is flanked by basic or hydrophobic side-chains, or both. This arrangement of specific and nonspecific binding sites has several profound consequences.

The nonspecific-interaction energy can add to the stereospecific interaction to greatly increase the net interaction energy. In practice, this can lead to $\leq 10^4$-fold–higher binding affinities. In the cell, this translates into a potent membrane-targeting mechanism. In other cases, the nonspecific component may be weak or even unfavorable. Some membrane-binding domains seem to have a dual life as receptors for mutually antagonistic membrane-bound and soluble second messengers.

Nonspecific membrane interactions can, in principle, augment the stereospecificity of the specific component of the interaction. The nonspecific membrane interaction makes an additional point of contact to define stereospecific interactions. Stereospecific recognition of a chiral lipid embedded in a membrane can be achieved with only two direct contacts between the protein and the lipid, provided that the protein makes an additional contact with the membrane. The degree of exposed hydrophobic surface on the protein dictates the depth to which it can penetrate the bilayer. The locations of known specific lipid-binding sites on domain structures closely match the expected distances of the lipid head groups as measured from the center of the bilayer. The relative positioning of the specific- and nonspecific-binding sites serves as a molecular ruler that has no counterpart among domains that recognize soluble ligands.

Biological Functions for Low-Affinity and Nonspecific Interactions

Many of the interactions described for membrane-targeting domains are of relatively low affinity. This complicates the problem of sorting out physiologically important interactions from artifacts. Many weak interactions are clearly important in cells and, indeed, appear to be weak "by design." Cooperativity can be achieved by the oligomerization of weakly interacting domains into an assembly that binds membranes strongly. Under physiological conditions, the stable

interaction of many signaling proteins with membranes depends on ligand binding by two or more different domains, for instance the C1 and C2 domains of PKC. This arrangement allows proteins such as PKC to function as temporal coincidence detectors.

Targeting vs Allosteric Regulation

The current emphasis on the targeting roles of membrane-binding domains should not obscure their equally important roles in the allosteric regulation of enzymes that contain them. In an evolutionary economy, a given domain in a given protein often contributes to regulation at both levels. It is clear that many protein kinases and GTPase activating proteins are allosterically activated by engagement of their membrane-binding domains. For the best understood example, PKC, this is a multistep process in which membrane localization is necessary but not sufficient for PKC activation. In contrast, some GAPs can be activated when their PH domains bind soluble inositol phosphates, whereas GAP targeting requires a membrane-bound phosphoinositide.

Can Domain Studies Help Read Genome Sequences?

One of the great challenges to biologists in the postgenomic era will be the prediction of protein function from sequence. The concept of modular domains, developed over the past 15 years or so, is one of the most powerful tools available. The sophisticated use of domain data can contribute to predicting protein function. Clearly there is not a one-to-one correspondence between domain structure and function. Not all C1 domains bind diacylglycerol, not all C2 domains bind Ca^{2+}, and not all PH domains bind specifically to phosphoinositides. The attribution of such functions cannot be based solely on the presence of such a domain in a protein sequence.

Fortunately, structural and functional studies have allowed sequence motifs to be discovered whereby domains can be subdivided into “flavors” with common functions. These assignments may be very reliable when the sequence of interest has high identity to that of a well-characterized domain whose structure and binding specificity are known. Prediction is much less reliable for highly divergent sequences. A complete understanding of the sequence/function relationships of domains would be most valuable. A key direction for the bioinformatics of protein domains will be to systematize and automate the process of classifying domains into functional subgroups and to increase its scope and reliability.

ACKNOWLEDGMENTS

We thank T Balla, A Hickman, S McLaughlin, A Newton, and A Toker for comments on the manuscript. We apologize to the authors of many seminal papers, especially those predating 1994, that could not be cited for reasons of space.

Visit the Annual Reviews home page at www.AnnualReviews.org

LITERATURE CITED

1. Alessi DR, James SR, Downes CP, Holmes AB, Gaffney PR, et al. 1997. Characterization of a 3-phosphoinositide-dependent protein kinase which phosphorylates and activates protein kinase Bα. *Curr. Biol.* 7:261–69
2. Anderson KE, Coadwell J, Stephens LR, Hawkins PT. 1998. Translocation of PDK-1 to the plasma membrane is important in allowing PDK-1 to activate protein kinase B. *Curr. Biol.* 8:684–91
3. Arcaro A, Volinia S, Zvelebil MJ, Stein R, Watton SJ, et al. 1998. Human phosphoinositide 3-kinase C2β, the role of calcium and the C2 domain in enzyme activity. *J. Biol. Chem.* 273:33082–90
4. Ball A, Nielsen R, Gelb MH, Robinson BH. 1999. Interfacial membrane docking of cytosolic phospholipase A_2 C2 domain using electrostatic potential-modulated spin relaxation magnetic resonance. *Proc. Natl. Acad. Sci. USA* 96:6637–42
5. Baraldi E, Djinovic Carugo K, Hyvönen M, Lo Surdo P, et al. 1999. Structure of the PH domain from Bruton's tyrosine kinase in complex with inositol 1,3,4,5-tetrakisphosphate. *Structure* 7:449–60
6. Bateman A, Birney E, Durbin R, Eddy SR, Finn RD, Sonnhammer EL. 1999. Pfam 3.1: 1313 multiple alignments match the majority of proteins. *Nucleic Acids Res.* 27:260–62
7. Bittova L, Sumandea M, Cho W. 1999. A structure-function study of the C2 domain of cytosolic phospholipase A_2. Identification of essential calcium ligands and hydrophobic membrane binding residues. *J. Biol. Chem.* 274:9665–72
8. Bottomley MJ, Salim K, Panayotou G. 1998. Phospholipid-binding protein domains. *Biochim. Biophys. Acta* 1436:165–83
9. Bromann PA, Boetticher EE, Lomasney JW. 1997. A single amino acid substitution in the pleckstrin homology domain of phospholipase C-δ1 enhances the rate of substrate hydrolysis. *J. Biol. Chem.* 272:16240–46
10. Burd CG, Emr SD. 1998. Phosphatidylinositol(3)-phosphate signaling mediated by specific binding to RING FYVE domains. *Mol. Cell* 2:157–62
11. Callaghan J, Simonsen A, Gaullier J-M, Toh B-H, Stenmark H. 1999. The endosome fusion regulator early-endosomal autoantigen 1 (EEA1) is a dimer. *Biochem. J.* 338:539–43
12. Chae YK, Abildgaard F, Chapman ER, Markley JL. 1998. Lipid binding ridge on loops 2 and 3 of the C2A domain of synaptotagmin I as revealed by NMR spectroscopy. *J. Biol. Chem.* 273:25659–63
13. Chapman ER, Davis AF. 1998. Direct interaction of a Ca^{2+}-binding loop of synaptotagmin with lipid bilayers. *J. Biol. Chem.* 273:13994–4001
14. Chen RH, Corbalan-Garcia S, Bar-Sagi D. 1997. The role of the PH domain in the signal-dependent membrane targeting of Sos. *EMBO J.* 16:1351–59
15. Cifuentes ME, Delaney T, Rebecchi MJ. 1994. D-*myo*-inositol 1,4,5 trisphosphate inhibits binding of phospholipase C-δ1 to bilayer membranes. *J. Biol. Chem.* 269:1945–48
16. Corbalan-Garcia S, Rodrigues-Alfaro JA, Gomez-Fernandez JC. 1999. Determination of the calcium-binding sites of the C2 domain of protein kinase Cα that are critical for its translocation to the plasma membrane. *Biochem. J.* 337:513–21
17. Cullen PJ, Hsuan JJ, Truong O, Letcher AJ, Jackson TR, et al. 1995. Identification of a specific Ins(1,3,4,5)P_4 binding protein as a member of the GAP1 family. *Nature* 376:527–30

18. Cutler RE Jr, Stephens RM, Saracino MR, Morrison DK. 1998. Autoregulation of the Raf-1 serine/threonine kinase. *Proc. Natl. Acad. Sci. USA* 95:9214–19
19. Daub M, Jockel J, Quack T, Weber CK, Schmitz F, et al. 1998. The RafC1 cysteine-rich domain contains multiple distinct regulatory epitopes which control Ras-dependent Raf activation. *Mol. Cell. Biol.* 18:6698–710
20. Davletov B, Perisic O, Williams RL. 1998. Calcium-dependent membrane penetration is a hallmark of the C2 domain of cytosolic phospholipase A_2 whereas the C2A domain of synaptotagmin binds membranes electrostatically. *J. Biol. Chem.* 273: 19093–96
21. Dessen A, Tang J, Schmidt H, Stahl M, Clark JD, et al. 1999. Crystal structure of human cytosolic phospholipase A_2 reveals a novel topology and catalytic mechanism. *Cell* 97:349–60
22. Dhe-Paganon S, Ottinger EA, Nolte RT, Eck MJ, Shoelson SE. 1999. Crystal structure of the pleckstrin homology-phosphotyrosine binding (PH-PTB) targeting region of insulin receptor substrate 1. *Proc. Natl. Acad. Sci. USA* 96:8378–83
23. Downing AK, Driscoll PC, Gout I, Salim K, Zvelebil MJ, Waterfield MD. 1994. 3-Dimensional solution structure of the pleckstrin homology domain from dynamin. *Curr. Biol.* 4:884–91
24. Ebinu JO, Bottorff DA, Chan EYW, Stand SL, Dunn RJ, Stone JC. 1998. RasGRP, a Ras guanylyl nucleotide-releasing protein with calcium- and diacylglycerol-binding motifs. *Science* 280:1082–86
25. Eck MJ, DhePaganon S, Trub T, Nolte RT, Shoelson SE. 1996. Structure of the IRS-1 PTB domain bound to the juxtamembrane region of the insulin receptor. *Cell* 85:695–705
26. Edwards AS, Newton AC. 1997. Regulation of protein kinase C βII by its C2 domain. *Biochemistry* 36:15615–23
27. Essen L-O, Perisic O, Cheung R, Katan M, Williams RL. 1996. Crystal structure of a mammalian phosphoinositide-specific phospholipase Cδ. *Nature* 380:595–602
28. Essen L-O, Perisic O, Lynch DE, Katan M, Williams RL. 1997. A ternary metal binding site in the C2 domain of phosphoinositide-specific phospholipase C-δ1. *Biochemistry* 36:2753–62
29. Falasca M, Logan SK, Lehto VP, Baccante G, Lemmon MA, Schlessinger J. 1998. Activation of phospholipase Cγ by PI 3-kinase-induced PH domain-mediated membrane targeting. *EMBO J.* 17:414–22
30. Ferguson KM, Lemmon MA, Schlessinger J, Sigler PB. 1994. Crystal structure at 2.2 Å resolution of the pleckstrin homology domain from human dynamin. *Cell* 79:199–209
31. Ferguson KM, Lemmon MA, Schlessinger J, Sigler PB. 1995. Structure of the high affinity complex of inositol trisphosphate with a phospholipase C pleckstrin homology domain. *Cell* 83:1037–46
32. Franke TF, Kaplan DR, Cantley LC, Toker A. 1997. Direct regulation of the Akt proto-oncogene product by phosphatidylinositol-3,4-bisphosphate. *Science* 275:665–68
33. Frech M, Andjelkovic M, Ingley E, Reddy KK, Falck JR, Hemmings BA. 1997. High affinity binding of inositol phosphates and phosphoinositides to the pleckstrin homology domain of RAC/protein kinase B and their influence on kinase activity. *J. Biol. Chem.* 272:8474–81
34. Fruman DA, Rameh LE, Cantley LC. 1999. Phosphoinositide binding domains: embracing 3-phosphate. *Cell* 97:817–20
35. Fujii M, Ohtsubo M, Ogawa T, Kamata H, Hirata H, Yagisawa H. 1999. Real-time visualization of PH domain-dependent translocation of phospholipase C-δ1 in renal epithelial cells (MDCK): response to hypo-osmotic stress. *Biochem. Biophys. Res. Commun.* 254:284–91
36. Fukuda M, Kojima T, Kabayama H, Mikoshiba K. 1996. Mutation of the pleckstrin homology domain of Bruton's

tyrosine kinase in immunodeficiency impaired inositol 1,3,4,5-tetrakisphosphate binding capacity. *J. Biol. Chem.* 271: 30303–6

37. Fukuda M, Mikoshiba K. 1996. Structure-function relationships of the mouse Gap1^{m}—determination of the inositol 1,3,4,5-tetrakisphosphate-binding domain. *J. Biol. Chem.* 271:18838–42
38. Fushman D, Cahill S, Lemmon MA, Schlessinger J, Cowburn D. 1995. Solution structure of the pleckstrin homology domain of dynamin by heteronuclear NMR spectroscopy. *Proc. Natl. Acad. Sci. USA* 92:816–20
39. Fushman D, Najmabadi-Haske T, Cahill S, Zheng J, LeVine H III, Cowburn D. 1998. The solution structure and dynamics of the pleckstrin homology domain of G protein-coupled receptor kinase 2 (β-adrenergic receptor kinase 1). *J. Biol. Chem.* 273:2835–43
40. Garcia P, Gupta R, Shah S, Morris AJ, Rudge SA, et al. 1995. The pleckstrin homology domain of phospholipase C-δ1 binds with high affinity to phosphatidylinositol 4,5-bisphosphate in bilayer membranes. *Biochemistry* 34:16228–34
41. Gaullier J-M, Simonsen A, D'Arrigo A, Bremnes B, Stenmark H. 1998. FYVE fingers bind PtdIns(3)P. *Nature* 394:432–33
42. Gaullier J-M, Simonsen A, D'Arrigo A, Bremnes B, Stenmark H. 1999. FYVE finger proteins as effectors of phosphatidylinositol 3-phosphate. *Chem. Phys. Lipids* 98:87–94
43. Gijon MA, Spencer DM, Kaiser AL, Leslie CC. 1999. Role of phosphorylation sites and the C2 domain in regulation of cytosolic phospholipase A2. *J. Cell Biol.* 145: 1219–32
44. Grobler JA, Essen L-O, Williams RL, Hurley JH. 1996. C2 domain conformational changes in phospholipase Cδ1. *Nat. Struct. Biol.* 3:788–95
45. Grobler JA, Hurley JH. 1997. Similarity between C2 domain jaws and immunoglobulin CDRs. *Nat. Struct. Biol.* 4:261–62
46. Grobler JA, Hurley JH. 1998. Catalysis by phospholipase C δ1 requires that Ca^{2+} bind to the catalytic domain, but not the C2 domain. *Biochemistry* 37:5020–28
47. Han J, Luby-Phelps K, Das B, Shu X, Xia Y, et al. 1998. Role of substrates and products of PI 3-kinase in regulating activation of Rac-related guanosine triphosphatases by Vav. *Science* 279:558–60
48. Harlan JE, Hajduk PJ, Yoon HS, Fesik SW. 1994. Pleckstrin homology domains bind to phosphatidylinositol (4,5) bisphosphate. *Nature* 371:168–70
49. Harlan JE, Yoon HS, Hajduk PJ, Fesik SW. 1995. Structural characterization of the interaction between a pleckstrin homology domain and phosphatidylinositol (4,5) bisphosphate. *Biochemistry* 34:9859–64
50. Hirose K, Kadowaki S, Tanabe M, Takeshima H, Iino M. 1999. Spatiotemporal dynamics of inositol 1,4,5-trisphosphate that underlies complex Ca^{2+} mobilization patterns. *Science* 284:1527–30
51. Hixon MS, Ball A, Gelb MN. 1998. Calcium-dependent and -independent interfacial binding and catalysis of cytosolic group IV phospholipase A_2. *Biochemistry* 37:8516–26
52. Hommel U, Zurini M, Luyten M. 1994. Solution structure of a cysteine-rich domain of rat protein kinase C. *Nat. Struct. Biol.* 1:383–87
53. Hurley JH, Grobler JA. 1997. Protein kinase C and phospholipase C: bilayer interactions and regulation. *Curr. Opin. Struct. Biol.* 7:557–65
54. Hurley JH, Newton AC, Parker PJ, Blumberg PM, Nishizuka Y. 1997. Taxonomy and function of C1 protein kinase C homology domains. *Protein Sci.* 6:477–80
55. Hyvönen M, Macias MJ, Nilges M, Oschkinat H, Saraste M, Wilmanns M. 1995. Structure of the binding site for inositol phosphates in a PH domain. *EMBO J.* 14:4676–85

56. Hyvönen M, Saraste M. 1997. Structure of the PH domain and Btk motif from Bruton's tyrosine kinase: molecular explanations for X-linked agammaglobulinaemia. *EMBO J.* 16:3396–404
57. Iglesias T, Matthews S, Rozengurt E. 1998. Dissimilar phorbol ester binding properties of the individual cysteine-rich motifs of protein kinase D. *FEBS Lett.* 437:19–23
58. Irie K, Oie K, Nakahara A, Yanai Y, Ohigashi H, et al. 1998. Molecular basis for protein kinase C isozyme-selective binding: the synthesis, folding, and phorbol ester binding of the cysteine-rich domains of all protein kinase C isozymes. *J. Am. Chem. Soc.* 120:9159–67
59. Isakoff SJ, Cardozo T, Andreev J, Li Z, Ferguson KM, et al. 1998. Identification and analysis of PH domain-containing targets of phosphatidylinositol 3-kinase using a novel in vivo assay in yeast. *EMBO J.* 17:5374–87
60. James SR, Downes CP, Gigg R, Grove SJA, Holmes AB, Alessi DR. 1996. Specific binding of the Akt-1 protein kinase to phosphatidylinositol 3,4,5-trisphosphate without subsequent activation. *Biochem. J.* 315:709–13
61. Johnson JE, Edwards AS, Newton AC. 1997. A putative phosphatidylserine binding motif is not involved in the lipid regulation of protein kinase C. *J. Biol. Chem.* 272:30787–92
62. Kavran JM, Klein DE, Lee A, Falasca M, Isakoff SJ, et al. 1998. Specificity and promiscuity in phosphoinositide binding by pleckstrin homology domains. *J. Biol. Chem.* 273:30497–508
63. Kazanietz MG, Barchi JJ Jr, Omichinski JG, Blumberg PM. 1995. Low affinity binding of phorbol esters to protein kinase C and its recombinant cysteine-rich region in the absence of phospholipids. *J. Biol. Chem.* 270:14679–84
64. Kazanietz MG, Wang S, Milne GWA, Lewin NE, Liu HL, Blumberg PM. 1995. Residues in the 2nd cysteine-rich region of protein kinase C-δ relevant to phorbol ester binding as revealed by site-directed mutagenesis. *J. Biol. Chem.* 270:21852–59
65. Klarlund JK, Guilherme A, Holik JJ, Virbasius A, Czech MP. 1997. Signaling by phosphoinositide-3,4,5-trisphosphate through proteins containing pleckstrin and Sec7 homology domains. *Science* 275:1927–30
66. Klarlund JK, Rameh LE, Cantley LC, Buxton JM, Holik JJ, et al. 1998. Regulation of GRP1-catalyzed ADP ribosylation factor guanine nucleotide exchange by phosphatidylinositol 3,4,5-trisphosphate. *J. Biol. Chem.* 273:1859–62
67. Klein DE, Lee A, Frank DW, Marks MS, Lemmon MA. 1998. The pleckstrin homology domains of dynamin isoforms require oligomerization for high affinity phosphoinositide binding. *J. Biol. Chem.* 273:27725–33
68. Kojima T, Fukuda M, Watanabe Y, Hamazato F, Mikoshiba K. 1997. Characterization of the pleckstrin homology domain of Btk as an inositol polyphosphate and phosphoinositide binding domain. *Biochim. Biophys. Res. Commun.* 236:333–39
69. Koshiba S, Kigawa T, Kim J-H, Shirouzu M, Bowtell D, Yokoyama S. 1997. The solution structure of the pleckstrin homology domain of mouse son-of-sevenless 1 (mSos1). *J. Mol. Biol.* 269:579–91
70. Kuriyan J, Cowburn D. 1997. Modular peptide recognition domains in eukaryotic signaling. *Annu. Rev. Biophys. Biomol. Struct.* 26:259–88
71. Kutateladze TG, Ogburn KG, Watson WT, de Beer T, Emr SD, et al. 1999. Phosphatidylinositol 3-phosphate recognition by the FYVE domain. *Mol. Cell* 3:605–11
72. Leevers SJ, Vanhaesebroeck B, Waterfield MD. 1999. Signalling through phosphoinositide 3-kinases: The lipids take centre stage. *Curr. Opin. Cell. Biol.* 11:219–25
73. Lemmon MA, Falasca M, Ferguson KM, Schlessinger J. 1997. Regulatory

recruitment of signalling molecules to the cell membrane by pleckstrin-homology domains. *Trends Cell Biol.* 7:237–42
74. Lemmon MA, Ferguson KM, Sigler PB, Schlessinger J. 1995. Specific and high-affinity binding of inositol phosphates to an isolated pleckstrin homology domain. *Proc. Natl. Acad. Sci. USA* 92:10472–76
75. Levine TP, Munro S. 1998. The pleckstrin homology domain of oxysterol-binding protein recognises a determinant specific to Golgi membranes. *Curr. Biol.* 8:729–39
76. Li T, Rawlings DJ, Park H, Kato RM, Witte ON, Satterthwaite AB. 1997. Constitutive membrane association potentiates activation of Bruton tyrosine kinase. *Oncogene* 15:1375–83
77. Li T, Tsukada S, Satterthwaite A, Havlik MH, Park H, et al. 1995. Activation of Bruton's tyrosine kinase (BTK) by a point mutation in its pleckstrin homology (PH) domain. *Immunity* 2:451–60
78. Lin HC, Gilman AG. 1996. Regulation of dynamin I GTPase activity by G protein $\beta\gamma$ subunits and phosphatidylinositol 4,5-bisphosphate. *J. Biol. Chem.* 271:27979–82
79. Lockyer PJ, Bottomley JR, Reynolds JS, McNulty TJ, Venkateswarlu K, et al. 1997. Distinct subcellular localisations of the putative inositol 1,3,4,5-tetrakisphosphate receptors $GAP1^{IP4BP}$ and $GAP1^{m}$ result from the $GAP1^{IP4BP}$ PH domain directing plasma membrane targeting. *Curr. Biol.* 7:1007–10
80. Lockyer PJ, Wennstrom S, Kupzig S, Venkateswarlu K, Downward J, Cullen PJ. 1999. Identification of the Ras GTPase-activating protein $GAP1^{m}$ as a phosphatidylinositol 3,4,5-trisphosphate binding protein in vivo. *Curr. Biol.* 9:265–68
81. Lomasney JW, Cheng H-F, Roffler SR, King K. 1999. Activation of phospholipase C $\delta 1$ through C2 domain by a Ca^{2+}-enzyme-phosphatidylserine ternary complex. *J. Biol. Chem.* 274:21995–2001
82. Macias MJ, Musacchio A, Ponstingl H, Nilges M, Saraste M, Oschkinat H. 1994. Structure of the pleckstrin homology domain from β spectrin. *Nature* 369:675–77
83. Medkova M, Cho W. 1998. Mutagenesis of the C2 domain of protein kinase C-α. *J. Biol. Chem.* 273:17544–52
84. Medkova M, Cho W. 1999. Interplay of C1 and C2 domains of protein kinase C-α in its membrane binding and activation. *J. Biol. Chem.* 274:19852–61
85. Misra S, Hurley JH. 1999. Crystal structure of a phosphatidylinositol 3-phosphate-specific membrane targeting motif, the FYVE domain of Vps27p. *Cell* 97:657–66
86. Mosior M, Newton AC. 1996. Calcium-independent binding to interfacial phorbol esters causes protein kinase C to associate with membranes in the absence of acidic lipids. *Biochemistry* 35:1612–23
87. Mott HR, Carpenter JW, Zhong S, Ghosh S, Bell RM, Campbell SL. 1996. The solution structure of the Raf-1 cysteine-rich domain: a novel Ras and phospholipid binding site. *Proc. Natl. Acad. Sci. USA* 93:8312–17
88. Nagel W, Schilcher P, Zeitlmann L, Kolanus W. 1998. The PH domain and the polybasic c domain of cytohesin-1 cooperate specifically in plasma membrane association and cellular function. *Mol. Biol. Cell* 9:1981–94
89. Nalefski EA, Falke JJ. 1996. The C2 domain calcium-binding motif: structural and functional diversity. *Protein Sci.* 12: 2375–90
90. Nalefski EA, Falke JJ. 1998. Location of the membrane-docking face on the Ca^{2+}-activated C2 domain of cytosolic phospholipase A_2. *Biochemistry* 37:17642–50
91. Nalefski EA, McDonagh T, Somers W, Seehra J, Falke JJ, Clark JD. 1998. Independent folding and ligand specificity of the C2 calcium-dependent lipid binding domain of cytosolic phospholipase A_2. *J. Biol. Chem.* 273:1365–72

92. Nalefski EA, Slazas MM, Falke JJ. 1997. Ca^{2+}-signaling cycle of a membrane-docking C2 domain. *Biochemistry* 36: 12011–18
93. Newton AC, Johnson JJ. 1998. Protein kinase C: a paradigm for regulation of protein functions by two membrane-targeting modules. *Biochim. Biophys. Acta Rev. Biomembr.* 1376:155–72
94. Oancea E, Meyer T. 1998. Protein kinase C as a molecular machine for decoding calcium and diacylglycerol signals. *Cell* 95:307–18
95. Oancea E, Teruel MN, Quest AFG, Meyer T. 1998. Green fluorescent protein (GFP)-tagged cysteine-rich domains from protein kinase C as fluorescent indicators for diacylglycerol signaling in living cells. *J. Cell Biol.* 140:485–98
96. Odorizzi G, Babst M, Emr SD. 1998. Fab1p PtdIns(3)P 5-kinase function essential for protein sorting in the multivesicular body. *Cell* 95:847–58
97. Ostermeier C, Brünger AT. 1999. Structural basis of Rab effector specificity: crystal structure of the small G protein Rab3A complexed with the effector domain of rabphilin-3A. *Cell* 96:363–74
98. Pappa H, Murray-Rust J, Dekker LV, Parker PJ, McDonald NQ. 1998. Crystal structure of the C2 domain from protein kinase C-δ. *Structure* 6:885–94
99. Patki V, Lawe DC, Corvera S, Virbasius JV, Chawla A. 1998. A functional PtdIns(3)P binding motif. *Nature* 394:433–34
100. Pawson T, Scott JD. 1997. Signaling through scaffold, anchoring, and adaptor proteins. *Science* 278:2075–80
101. Pepio AM, Fan XT, Sossin WT. 1998. The role of C2 domains in Ca^{2+}-activated and Ca^{2+}-independent protein kinase Cs in aplysia. *J. Biol. Chem.* 273:19040–48
102. Perisic O, Fong S, Lynch DE, Bycroft M, Williams RL. 1998. Crystal structure of a calcium-phospholipid binding domain from cytosolic phospholipase A_2. *J. Biol. Chem.* 273:1596–604
103. Perisic O, Paterson HF, Mosedale G, Lara-González S, Williams RL. 1999. Mapping the phospholipid-binding surface and translocation determinants of the C2 domain from cytosolic phospholipase A_2. *J. Biol. Chem.* 274:14979–87
104. Pitcher JA, Touhara K, Payne ES, Lefkowitz RJ. 1995. Pleckstrin homology domain-mediated membrane association and activation of the beta-adrenergic receptor kinase requires coordinate interaction with G beta gamma subunits and lipid. *J. Biol. Chem.* 270:11707–10
105. Ponting CP, Aravind L. 1999. START: a lipid-binding domain in StAR, HD-ZIP and signalling proteins. *Trends Biochem. Sci.* 24:130–32
106. Prehoda KE, Lee DJ, Lim WA. 1999. Structure of the Enabled/VASP homology 1 domain-peptide complex: a key component in the spatial control of actin assembly. *Cell* 97:471–80
107. Rameh LE, Arvidsson A-K, Carraway KL III, Couvillon AD, Rathburn G, et al. 1997. A comparative analysis of the phosphoinositide binding specificity of pleckstrin homology domains. *J. Biol. Chem.* 272:22059–66
108. Rameh LE, Chen CS, Cantley LC. 1995. Phosphatidylinositol (3,4,5)P_3 interacts with SH2 domains and modulates PI-3-kinase association with tyrosine-phosphorylated proteins. *Cell* 83:821–30
109. Rebecchi MJ, Scarlata S. 1998. Pleckstrin homology domains: a common fold with diverse functions. *Annu. Rev. Biophys. Biomol. Struct.* 27:503–28
110. Rizo J, Sudhof TC. 1998. C2 domains, structure and function of a universal Ca^{2+} binding domain. *J. Biol. Chem.* 273:15879–82
111. Ron D, Kazanietz MG. 1999. New insights into the regulation of protein kinase C and novel phorbol ester receptors. *FASEB J.* In press

112. Sable CL, Filippa N, Filloux C, Hemmings BA, Van Obberghen E. 1998. Involvement of the pleckstrin homology domain in the insulin-stimulated activation of protein kinase B. *J. Biol. Chem.* 273:29600–6
113. Sakane F, Kai M, Wada I, Imai S, Kanoh H. 1996. The C-terminal part of diacylglycerol kinase α lacking zinc fingers serves as a catalytic domain. *Biochem. J.* 318:583–90
114. Salim J, Bottomley MJ, Querfurth E, Zvelebil MJ, Gout I, et al. 1996. Distinct specificity in the recognition of phosphoinositides by the pleckstrin homology domains of dynamin and Bruton's tyrosine kinase. *EMBO J.* 15:6241–50
115. Schultz J, Milpetz F, Bork P, Ponting CP. 1998. SMART, a simple modular architecture research tool: identification of signalling domains. *Proc. Natl. Acad. Sci. USA* 95:5857–64
116. Shao XG, Fernandez I, Sudhof TC, Rizo J. 1998. Solution structures of the Ca^{2+}-free and Ca^{2+}-bound C2A domain of synaptotgamin I: Does Ca^{2+} induce a conformational change? *Biochemistry* 37:16106–15
117. Shirai Y, Kashiwagi K, Yagi K, Sakai N, Saito N. 1998. Distinct effects of fatty acids on translocation of γ- and ε-subspecies of protein kinase C. *J. Cell Biol.* 143:511–21
118. Simonsen A, Lippe R, Christoforidis S, Gaullier J-M, Brech A, et al. 1998. EEA1 links PI(3)K function to Rab5 regulation of endosome fusion. *Nature* 394:494–98
119. Slater SJ, Ho C, Kelly MB, Larkin JD, Taddeo FJ, et al. 1996. Protein kinase Cα contains two activator binding sites that bind phorbol esters and diacylglycerols with opposite affinities. *J. Biol. Chem.* 271:4627–31
120. Smith CIE, Driscoll PC, Waterfield MD, Panayotou G. 1996. Distinct specificity in the recognition of phosphoinositides by the pleckstrin homology domains of dynamin and Bruton's tyrosine kinase. *EMBO J.* 15:6241–50
121. Soisson SM, Nimnual AS, Uy M, Bar-Sagi D, Kuriyan J. 1998. Crystal structure of the Dbl and pleckstrin homology domains from the human Son of Sevenless protein. *Cell* 95:259–68
122. Stauffer TP, Ahn S, Meyer T. 1998. Receptor-induced transient reduction in plasma membrane PtdIns(4,5)P2 concentration monitored in living cells. *Curr. Biol.* 8:343–46
123. Stenmark H, Asaland R, Toh B, D'Arrigo A. 1996. Endosomal localization of the autoantigen EEA1 is mediated by a zinc-binding FYVE finger. *J. Biol. Chem.* 271:24048–54
124. Stephens L, Anderson K, Stokoe D, Erdjument-Bromage H, Painter GF, et al. 1998. Protein kinase B kinases that mediate phosphatidylinositol 3,4,5-trisphosphate-dependent activation of protein kinase B. *Science* 279:710–14
125. Sutton RB, Sprang SR. 1998. Structure of the protein kinase Cβ phospholipid-binding C2 domain complexed with Ca^{2+}. *Structure* 6:1395–405
126. Sutton RD, Davletov BA, Berghuis AM, Sudhof TC, Sprang SR. 1995. Structure of the first C2 domain of synaptotagmin I: a novel Ca^{2+}/phospholipid binding fold. *Cell* 80:929–38
127. Swairjo MA, Concha NO, Kaetzel MA, Dedman JR, Seaton BA. 1995. Ca^{2+}-bridging mechanism and phospholipid head group recognition in the membrane-binding protein annexin V. *Nat. Struct. Biol.* 2:968–74
128. Szallasi Z, Bogi K, Gohari S, Biro T, Acs P, Blumberg PM. 1996. Non-equivalent roles for the first and second zinc fingers of protein kinase Cδ. *J. Biol. Chem.* 271:18229–301
129. Takeuchi H, Kanematsu T, Misumi Y, Sakane F, Konishi H, et al. 1997. Distinct specificity in the binding of inositol phosphates by pleckstrin homology

domains of pleckstrin, RAC-protein kinase, diacylglycerol kinase and a new 130 kDa protein. *Biochim. Biophys. Acta Mol. Cell Res.* 1359:275–85

130. Timm D, Salim K, Gout I, Guruprasad L, Waterfield M, Blundell T. 1994. Crystal structure of the pleckstrin homology domain from dynamin. *Nat. Struct. Biol.* 1:782–88
131. Tognon CE, Kirk HE, Passmore LA, Whitehead IP, Der CJ, Kay RJ. 1998. Regulation of RasGRP via a phorbol ester-responsive C1 domain. *Mol. Cell. Biol.* 18:6995–7008
132. Topham MK, Prescott SM. 1999. Mammalian diacylglycerol kinases, a family of lipid kinases with signaling functions. *J. Biol. Chem.* 274:11447–50
133. Tsukazaki T, Chiang TA, Davison AF, Attisano L, Wrana JL. 1998. SARA, a FYVE domain protein that recruits Smad2 to the TGF-β receptor. *Cell* 95:779–91
134. Ubach J, Zhang XY, Shao G, Sudhof TC, Rizo J. 1998. Ca^{2+} binding to synaptotagmin: How many Ca^{2+} ions bind to the tip of a C2 domain? *EMBO J.* 17:3921–30
135. Várnai P, Balla T. 1998. Visualization of phosphoinositides that bind pleckstrin homology domains: calcium- and agonist-induced dynamic changes and relationship to myo-[^{3}H]inositol-labeled phosphoinositide pools. *J. Cell Biol.* 143:501–10
136. Várnai P, Rother KI, Balla T. 1999. Phosphatidylinositol 3-kinase-dependent membrane association of the Bruton's tyrosine kinase pleckstrin homology domain visualized in single living cells. *J. Biol. Chem.* 274:10983–89
137. Venkateswarlu K, Oatey PB, Tavare JM, Cullen PJ. 1998. Insulin-dependent translocation of ARNO to the plasma membrane of adipocytes requires phosphatidylinositol 3-kinase. *Curr. Biol.* 8:463–66
138. Vetter IR, Nowak C, Nishimoto T, Kuhlmann J, Wittinghofer A. 1999. Structure of a Ran-binding domain complexed with Ran bound to a GTP analogue: implications for nuclear transport. *Nature* 398:39–46
139. Wang T, Pentyala S, Rebecchi MJ, Scarlata S. 1999. Differential association of the pleckstrin homology domains of phospholipases C-β1, C-β2, and C-δ1 with lipid bilayers and the $\beta\gamma$ subunits of heterotrimeric G proteins. *Biochemistry* 38:1317–24
140. Watton SJ, Downward J. 1999. Akt/PKB localisation and 3′ phosphoinositide generation at sites of epithelial cell-matrix and cell-cell interaction. *Curr. Biol.* 9:433–36
141. Wurmser AE, Gary JD, Emr SD. 1999. Phosphoinositide 3-kinases and their FYVE domain-containing effectors as regulators of vacuolar/lysosomal membrane trafficking pathways. *J. Biol. Chem.* 274:9129–32
142. Yagisawa H, Sakuma K, Paterson HF, Cheung R, Allen V, et al. 1998. Replacements of single basic amino acids in the pleckstrin homology domain of phospholipase C-δ1 alter the ligand binding, phospholipase activity, and interaction with the plasma membrane. *J. Biol. Chem.* 273:417–24
143. Yoon HS, Hajduk PJ, Petros AM, Olejniczak ET, Meadows RP, Fesik SW. 1994. Solution structure of a pleckstrin homology domain. *Nature* 369:672–75
144. Xu GY, McDonagh T, Yu H-A, Nalefski E, Clark JD, Cumming DA. 1998. Solution structure and membrane interactions of the C2 domain of cytosolic phospholipase A_2. *J. Mol. Biol.* 280:485–500
145. Xu RX, Pawelczyk T, Xia T-H, Brown SC. 1997. NMR structure of a protein kinase C-phorbol-binding domain and study of protein-lipid micelle interactions. *Biochemistry* 36:10709–17
146. Zhang G, Kazanietz MG, Blumberg PM, Hurley JH. 1995. Crystal structure of the Cys2 activator-binding domain of protein

kinase Cδ in complex with phorbol ester. *Cell* 81:917–24

147. Zhang P, Talluri S, Deng HY, Branton D, Wagner G. 1995. Solution structure of the pleckstrin homology domain of β-spectrin. *Structure* 3:1185–95
148. Zhang XY, Rizo J, Sudhof TC. 1998. Mechanism of phospholipid binding by the C2A domain of synaptotagmin I. *Biochemistry* 37:12395–403
149. Zhang ZT, Lee CH, Mandiyan V, Borg JB, Margolis B, et al. 1997. Sequence-specific recognition of the internalization motif of the Alzheimer's amyloid precursor protein by the X11 PTB domain. *EMBO J.* 16:6141–50
150. Zheng J, Cahill SM, Lemmon MA, Fushman D, Schlessinger J, Cowburn D. 1996. Identification of the binding site for acidic phospholipids on the PH domain of dynamin: implications for stimulation of GTPase activity. *J. Mol. Biol.* 255:14–21
151. Zheng J, Chen RH, Corbalan-Garcia S, Cahill D, Bar-Sagi D, Cowburn D. 1997. The solution structure of the pleckstrin homology domain of human SOS1. A possible structural role for the sequential association of diffuse B cell lymphoma and pleckstrin homology domains. *J. Biol. Chem.* 272:30340–44
152. Zhou MM, Ravichandran KS, Olejniczak EF, Petros AM, Meadows RP, et al. 1995. Structure and ligand recognition of the phosphotyrosine binding domain of Shc. *Nature* 378:584–92